VESSEL DRAFTING ENGINEERING

VESSEL SADDLE SUPPORT DETAIL-TYPE2b

DESIGN DATA PGM RUN ***V1.0***

* DESCRIPTION	PV-001		* ITEM NO.	PES21	
* VESSEL I.D	4829	mm	* SHELL TH'K	52	mm
* SADDLE HEIGHT,H	2896	mm	* RIB DISTANCE, R1	978	mm
* Dim. "G1"	33	mm	* SADDLE CONTACT ANGLE, ¢1	120	o
* Dim. "G2"	13	mm	* SADDLE WEB THICKNESS	16	mm
* SADDLE PAD THICKNESS	13	mm	* SADDLE PAD WIDTH,Tw	510	mm
* BASE PLATE THICKNESS,Bt	28	mm	* BASE PLATE WIDTH,Bw	460	mm
* RIB THICKNESS,Rt	16	mm	* BASE PLATE LENGTH,BL	3960	mm
* SADDLE PAD EXTENTION, We	50	mm			

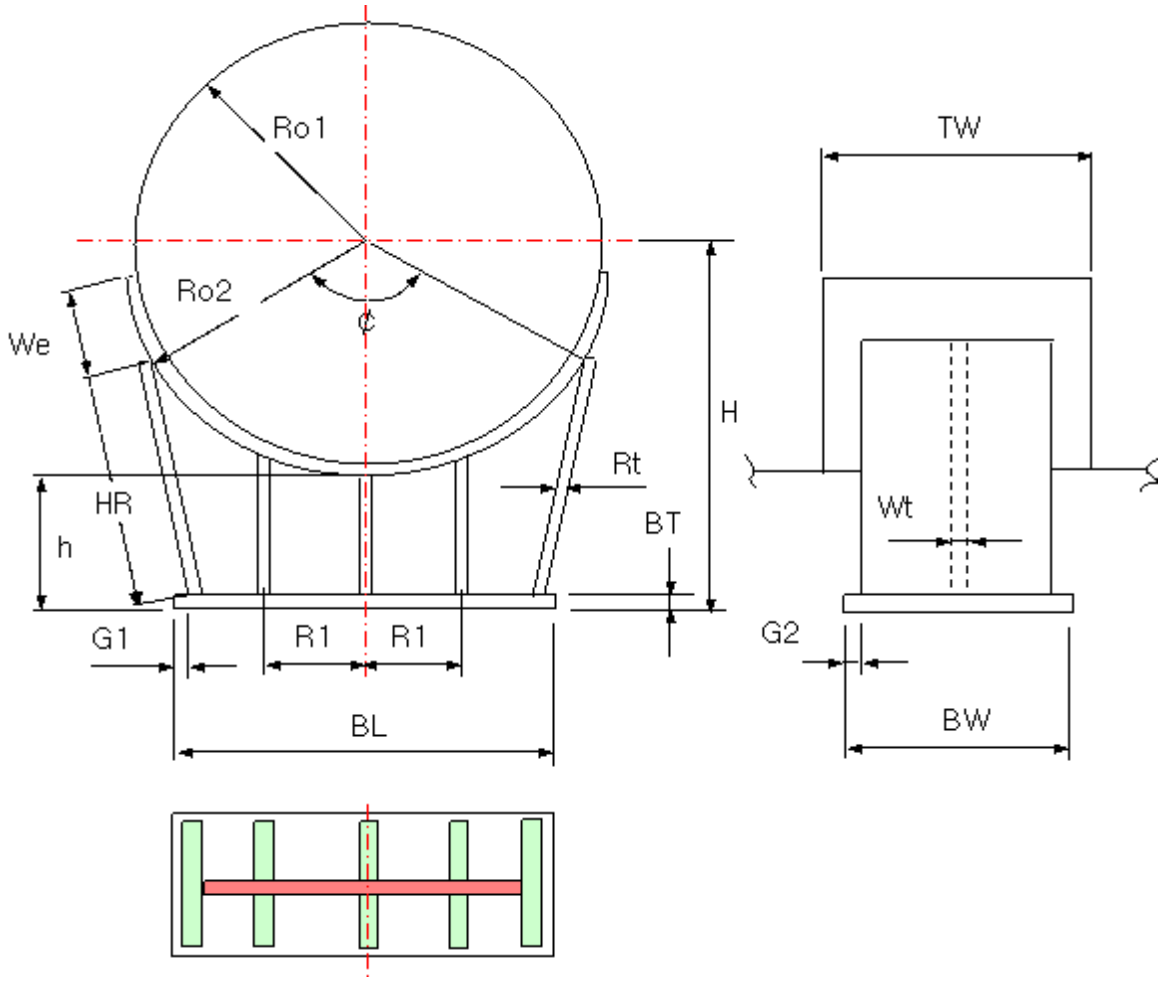

RESULT OF CALCULATION

* Vessel center to bottom of base, h	416.50	mm	* Base plate length, BL	3,960	mm

* Vessel outside radius, Ro1	2,466.5	mm	* Saddle pad outside radius, Ro2	2,479.5	mm
* Saddle web Arc area(Loss)	3.78	m^2	* Saddle web Arc area weight(Loss)	474	Kg
* Saddle web side area(Loss)	0.33	m^2	* Saddle web side area weight(Loss)	41	Kg
* Saddle web side slant angle, ₵2	7.0	o	* Saddle web side slant length,WL, HR	1,641	mm
* Saddle Net weight	1,429	Kg	* Saddle Gross weight	1,937	Kg

BOM LIST PER SADDLE

* PART NAME	t	W	L	Q'TY	N/WT(Kg)	G/WT (Kg)
* WEB	16	1,628	4,295	1	404	878
* SADDLE PAD	13	510	5,279	1	275	289
* BASE PLATE	28	460	3,960	1	400	420
* RIB,R1	16	434	1,641	2	179	188
* RIB,R2	16	209	590	4	129	135
* RIB,R3	16	209	389	2	42	44

GO TO TYPE1b

MENU PAGE-->>

Copyright © 2001 피이에스21 All rights reserved.
Please contact E-mail ***pes21@pes21.com***